Rear Fog Light

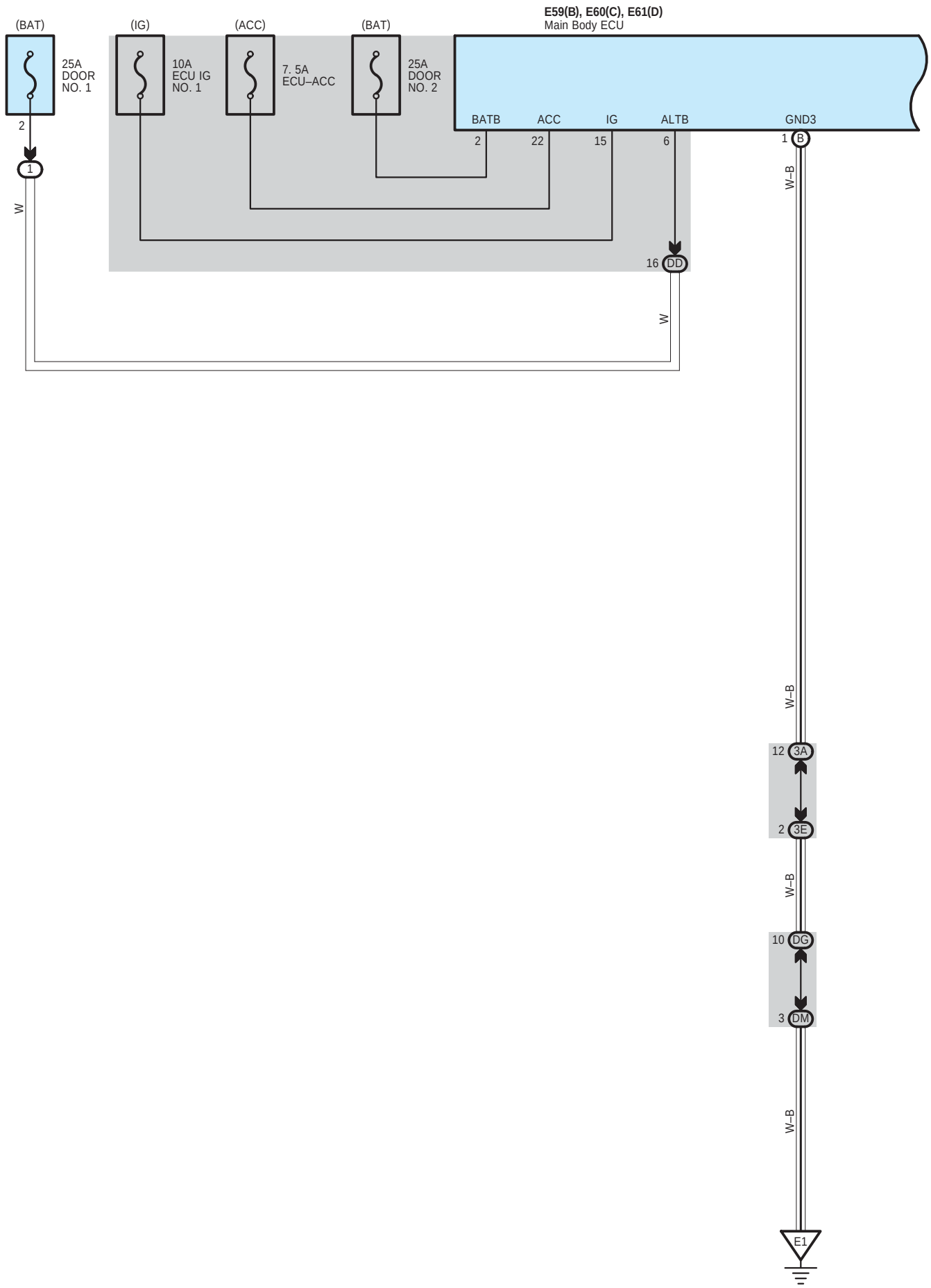

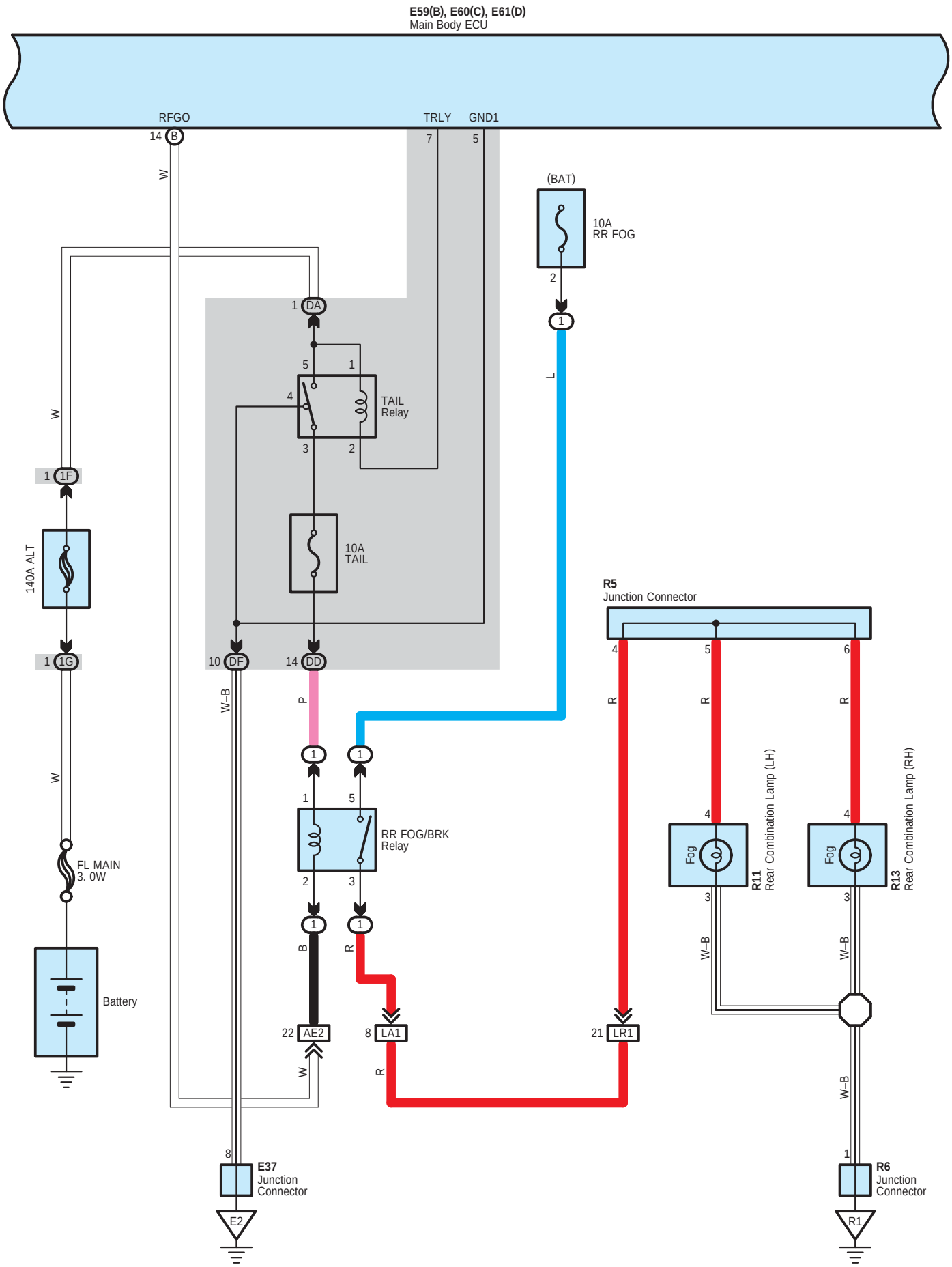
E59(B), E60(C), E61(D)
Main Body ECU
RFGO
TRLY
GND1
14 B
7
5
W
(BAT)
10A
RR FOG
2
1
L
1 DA
5
1
4
TAIL
Relay
3
2
W
1 1F
10A
TAIL
140A ALT
1 1G
10 DF
14 DD
W–B
P
R5
Junction Connector
4
5
6
R
R
R
1
1
1
5
RR FOG/BRK
Relay
2
3
Fog
R11
Rear Combination Lamp (LH)
Fog
R13
Rear Combination Lamp (RH)
W
FL MAIN
3. 0W
1
1
B
R
W–B
W–B
Battery
22 AE2
8 LA1
21 LR1
W
R
W–B
8
E37
Junction
Connector
E2
1
R6
Junction
Connector
R1

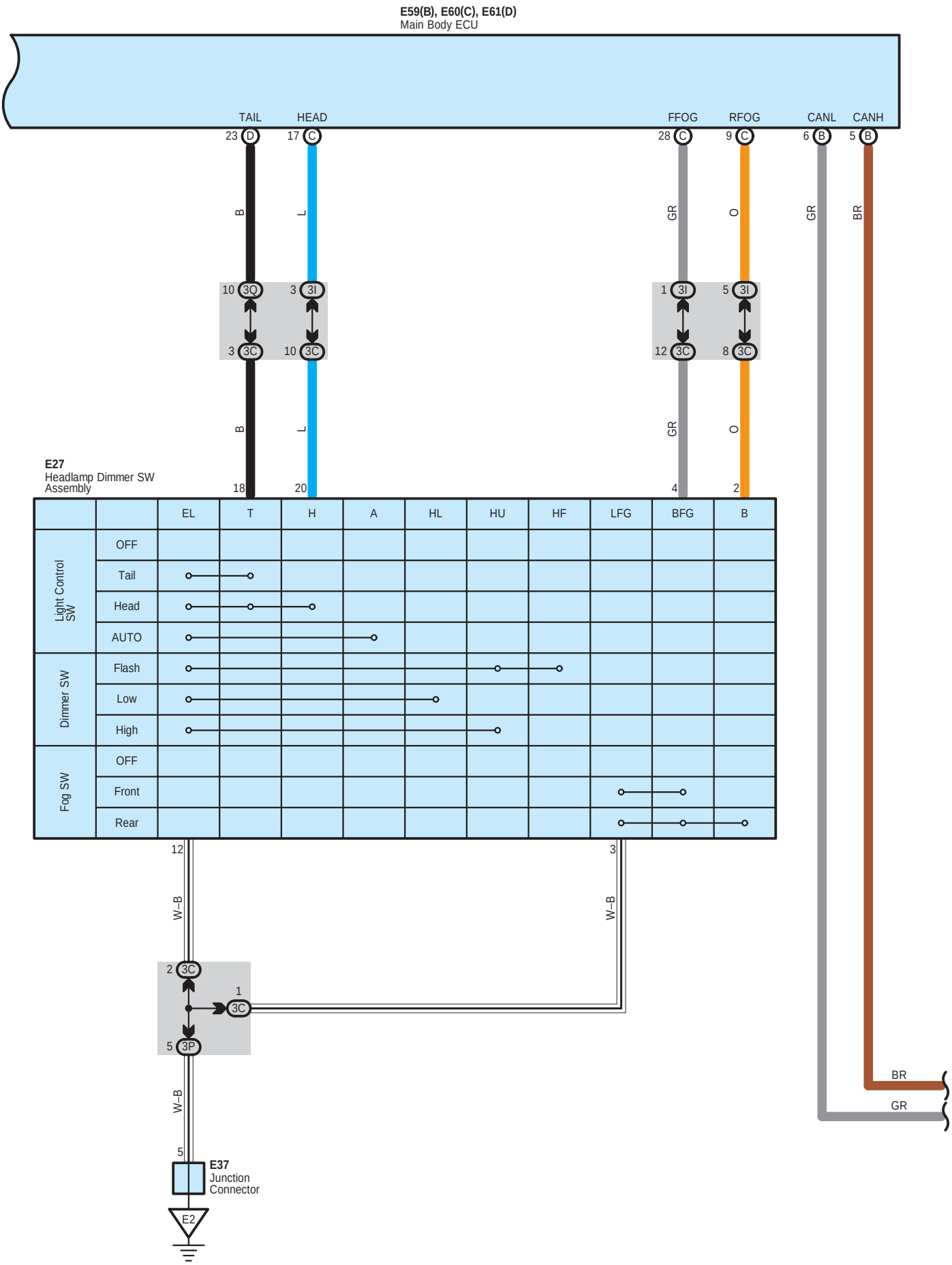
E59(B), E60(C), E61(D)
Main Body ECU
TAIL
HEAD
FFOG
RFOG
CANL
CANH
23 D
17 C
28 C
9 C
6 B
5 B
B
L
GR
O
GR
BR
10 3Q
3 3I
1 3I
5 3I
3 3C
10 3C
12 3C
8 3C
B
L
GR
O
E27
Headlamp Dimmer SW
Assembly
18
20
4
2
EL
T
H
A
HL
HU
HF
LFG
BFG
B
Light Control SW
OFF
Tail
Head
AUTO
Dimmer SW
Flash
Low
High
Fog SW
OFF
Front
Rear
12
3
W–B
W–B
2 3C
1 3C
5 3P
W–B
5
E37
Junction
Connector
E2
BR
GR

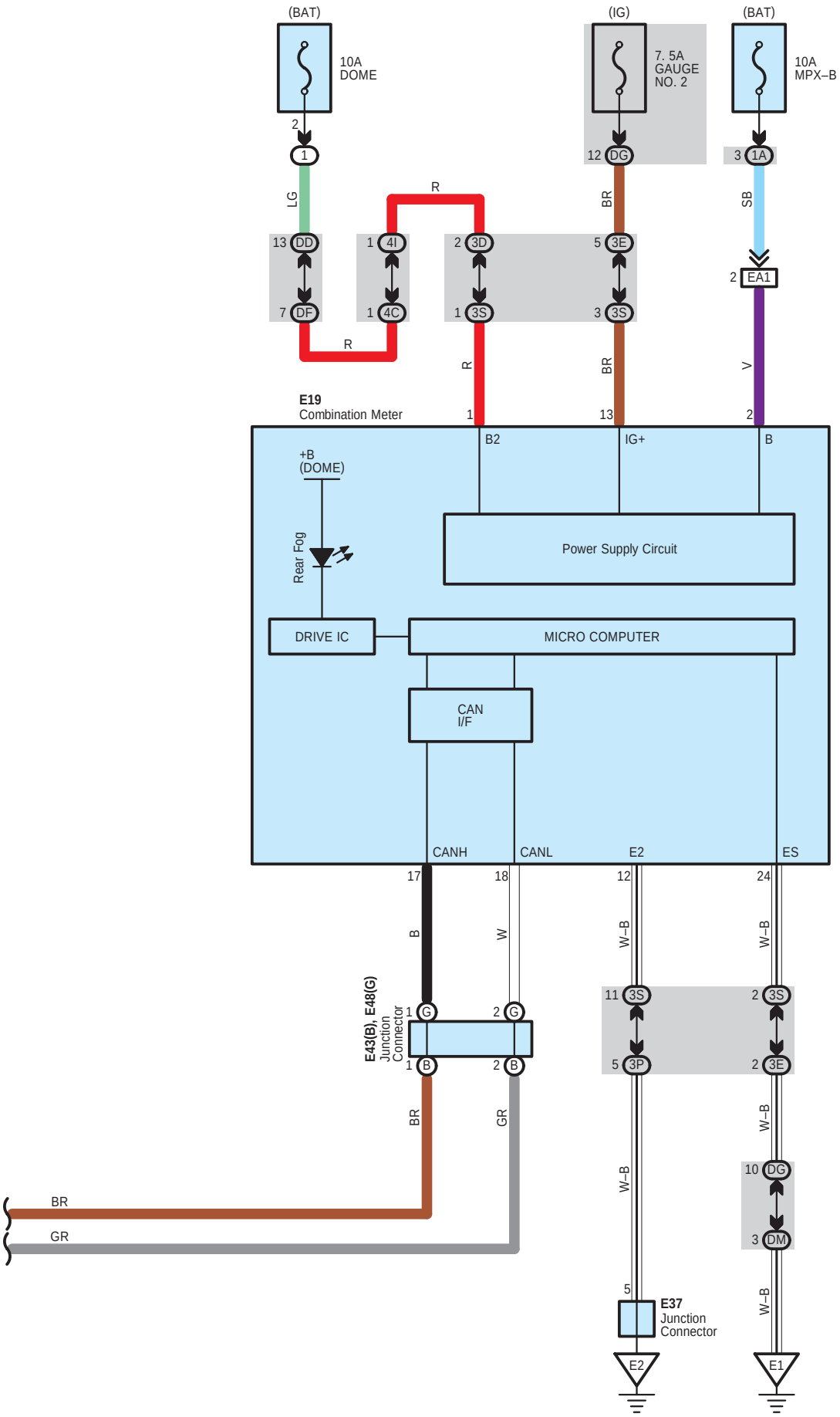
(BAT)
10A
DOME
(IG)
7. 5A
GAUGE
NO. 2
(BAT)
10A
MPX–B
2
1
LG
R
BR
SB
13 DD
7 DF
1 4I
1 4C
2 3D
1 3S
5 3E
3 3S
3 1A
2 EA1
R
R
BR
V
E19
Combination Meter
1
13
2
B2
IG+
B
+B
(DOME)
Rear Fog
Power Supply Circuit
DRIVE IC
MICRO COMPUTER
CAN
I/F
CANH
CANL
E2
ES
17
18
12
24
B
W
W–B
W–B
E43(B), E48(G)
Junction
Connector
1 G
2 G
1 B
2 B
11 3S
5 3P
2 3S
2 3E
BR
GR
W–B
W–B
10 DG
3 DM
BR
GR
W–B
5
E37
Junction
Connector
E2
E1

Rear Fog Light

: Parts Location

Code		See Page	Code		See Page	Code	See Page
E19		58	E48	G	48, 59	R5	65
E27		58	E59	B	59	R6	65
E37		58	E60	C	59	R11	65
E43	B	48, 59	E61	D	59	R13	65

: Relay Blocks

Code	See Page	Relay Blocks (Relay Block Location)
1	22	Engine Room R/B (Engine Compartment Left)

: Junction Block and Wire Harness Connector

Code	See Page	Junction Block and Wire Harness (Connector Location)
1A	24	Engine Room Main Wire and Engine Room J/B (Engine Compartment Left)
1F	22	
1G		
3A	36	Instrument Panel Wire and J/B No.3 (Instrument Panel Left)
3C		
3D		
3E		
3I		
3P		
3Q		
3S		
4C	42	Instrument Panel Wire and J/B No.4 (Instrument Panel Right)
4I		
DA	30	Engine Room Main Wire and Instrument Panel J/B (Lower Finish Panel)
DD		
DF	30	Instrument Panel Wire and Instrument Panel J/B (Lower Finish Panel)
DG	31	
DM	30	

: Connector Joining Wire Harness and Wire Harness

Code	See Page	Joining Wire Harness and Wire Harness (Connector Location)
AE2	69	Engine Room Main Wire and Instrument Panel Wire (Instrument Panel Left)
EA1	69	Instrument Panel Wire and Engine Room Main Wire (Left Kick Panel)
LA1	69	Floor Wire and Engine Room Main Wire (Cowl Side Left)
LR1	70	Floor Wire and Luggage Room Wire (Roof Side Rear Inner Panel LH)

: Ground Points

Code	See Page	Ground Points Location
E1	69	Left Side of the Instrument Panel Reinforcement
E2	69	Instrument Panel Brace LH
R1	70	Roof Side Rear Inner Panel LH